DOOR LOCK CONTROL (LHD)

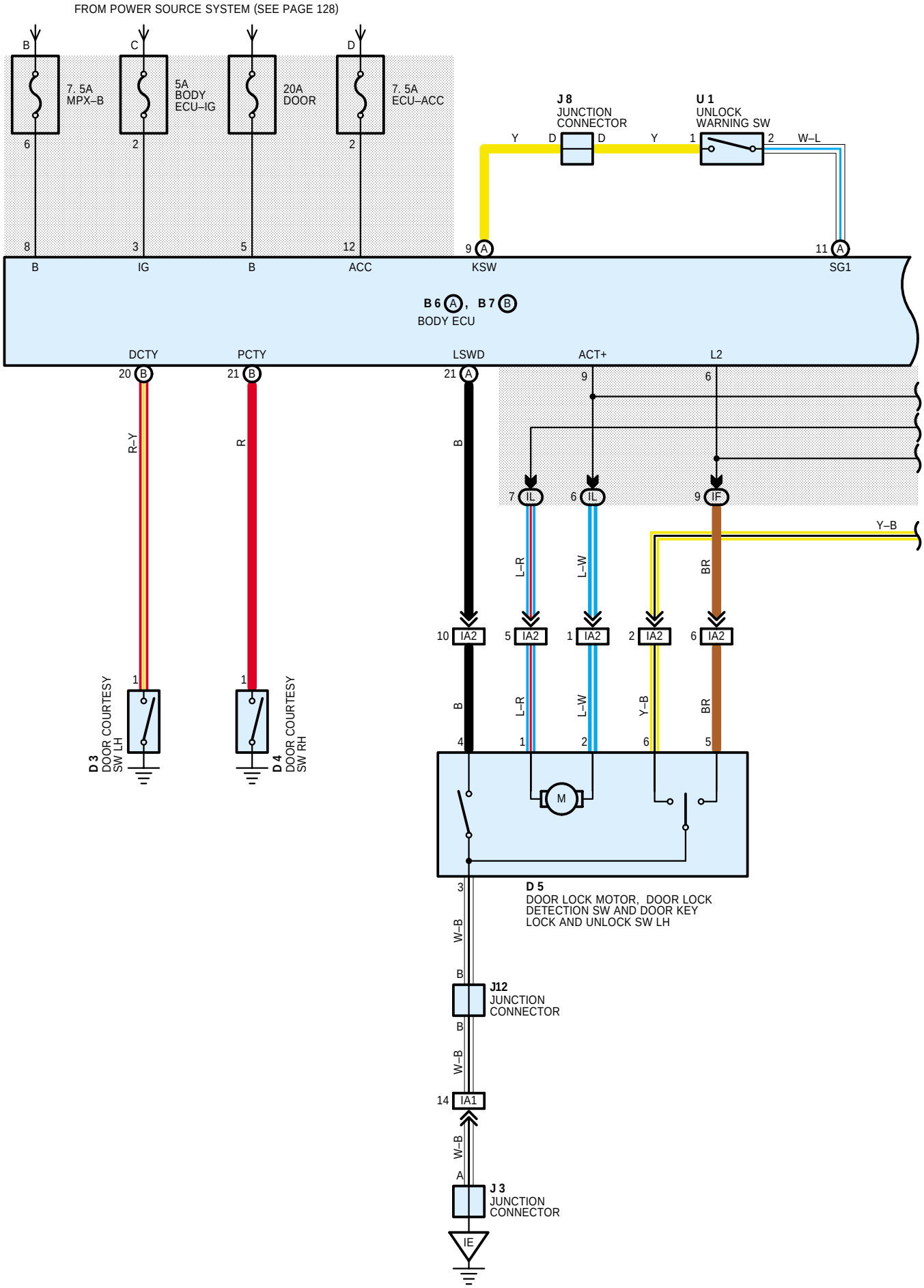

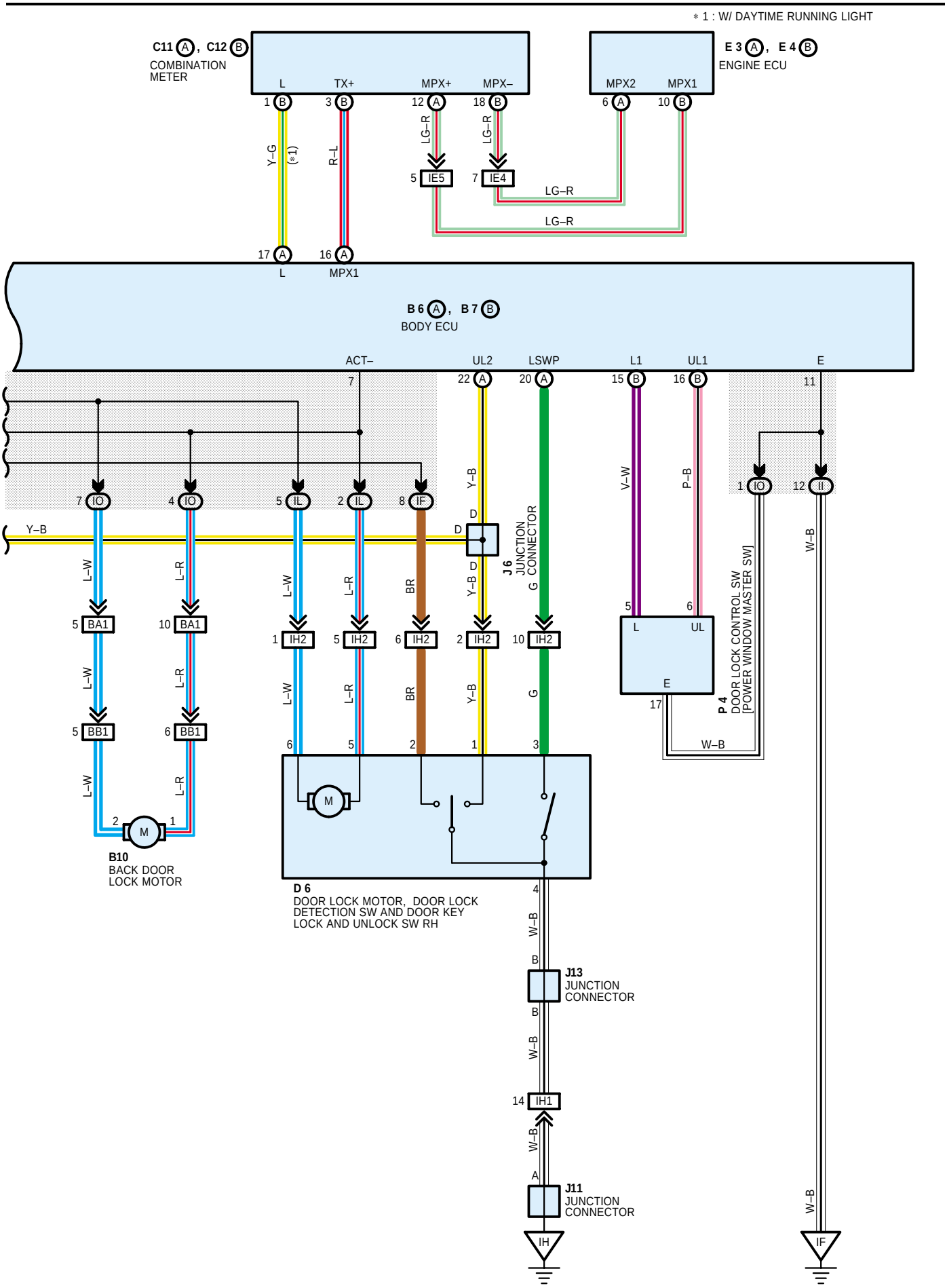

* 1 : W/ DAYTIME RUNNING LIGHT
C11 A, C12 B
COMBINATION METER
E 3 A, E 4 B
ENGINE ECU
L
TX+
MPX+
MPX–
MPX2
MPX1
Y–G
(*1)
R–L
LG–R
IE5
IE4
B 6 A, B 7 B
BODY ECU
ACT–
UL2
LSWP
L1
UL1
E
Y–B
V–W
P–B
W–B
L–W
L–R
BR
G
J 6
JUNCTION CONNECTOR
BA1
BB1
IH2
IH1
IO
IL
IF
II
UL
P 4
DOOR LOCK CONTROL SW [POWER WINDOW MASTER SW]
B10
BACK DOOR LOCK MOTOR
D 6
DOOR LOCK MOTOR, DOOR LOCK DETECTION SW AND DOOR KEY LOCK AND UNLOCK SW RH
J13
JUNCTION CONNECTOR
J11
JUNCTION CONNECTOR
IH